USG Ceiling Solutions

USG DATACONSTRUX™ CONTAINMENT

POWERED BY SUBZERO ENGINEERING®

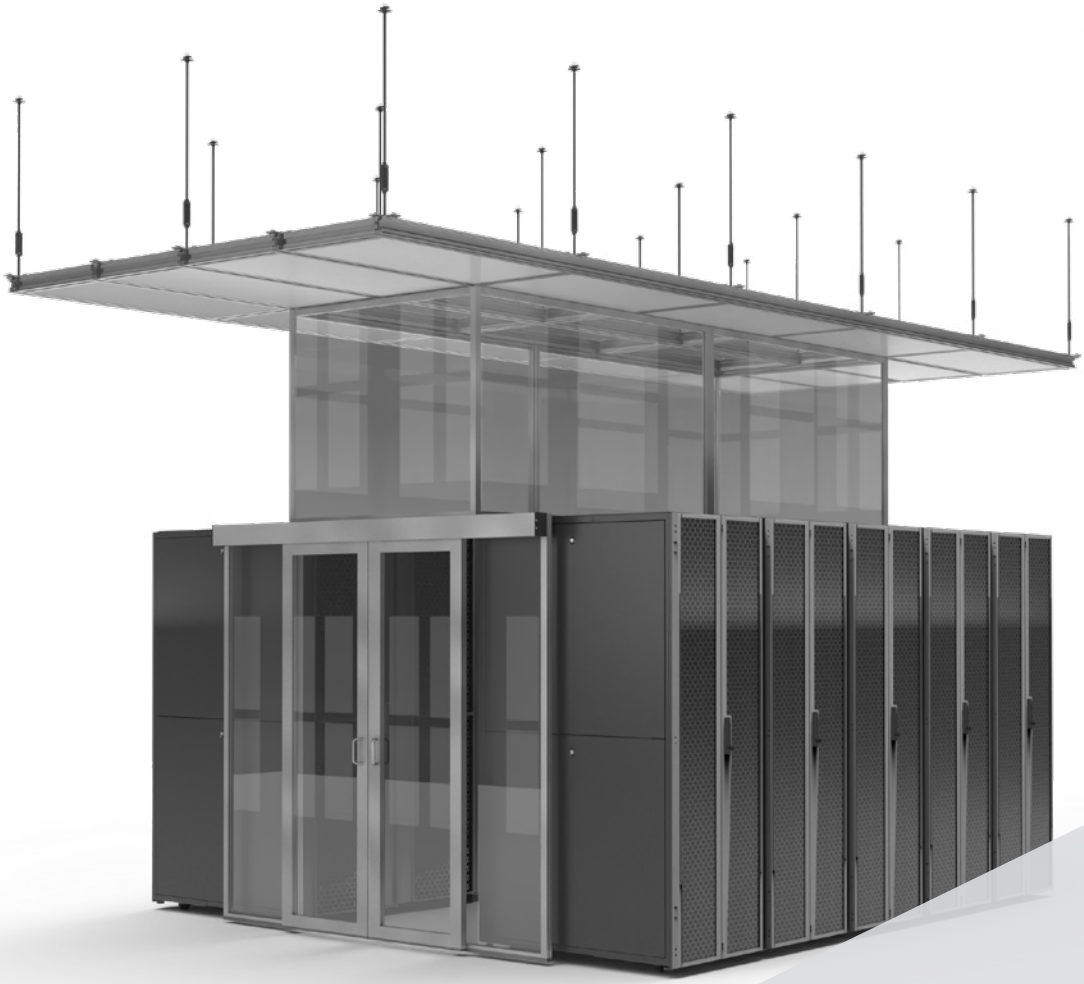

Rendering
© Subzero Engineering 2026.
All rights reserved.

DataConstrux™ Containment is a modular, aluminum-framed containment system with integrated doors and panels—available in ceiling- and floor-mount options for seamless compatibility and efficient integration into data hall environments.

FEATURES AND BENEFITS

- DataConstrux™ Containment includes ceiling- and floor-mounted options—designed for quick deployment and increased functionality with ceiling-mount designs integrating seamlessly with USG ALTA™ and CIMA™ Structural Suspension Systems.
- Custom hinged or sliding, single or double, soft closing doors with an air-tight design for cold and hot aisle containment solutions.
- Doors have a no threshold design, eliminating tripping hazards and allowing for easy movement of carts in and out of the aisle.
- Fully configurable wall panels easily fill in all sizes of gaps to create one continuous containment solution available in polycarbonate and thermoplastic panels.
- Aluminum-framed doors and panels available in clear or black finish.

APPLICATIONS

- Data Centers

TYPICAL SYSTEM

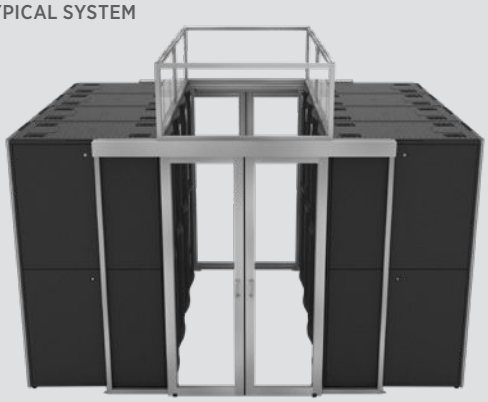

USG | SUBZERO ENGINEERING

Systems

HINGED DOOR

Left or right hand open.

Width: 30.75" - 57.75"
Height: 78" - 101.5"

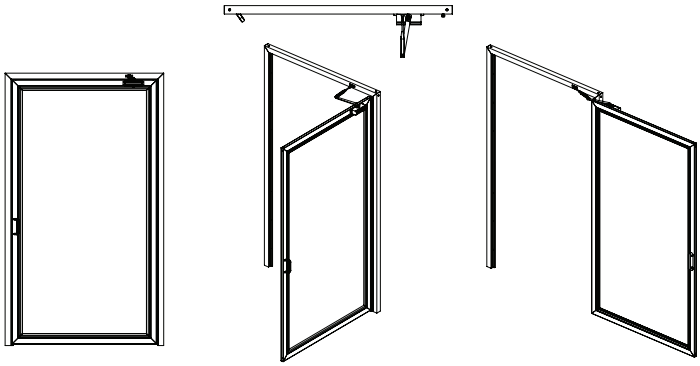

HINGED DOUBLE DOOR

No fixed door—each door opens independently.

Width: 40" - 60"
Height: 78" - 101.5"

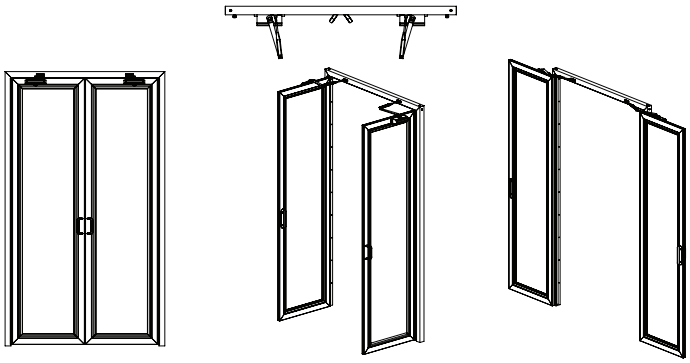

SLIDING DOOR

Easy-glide track system with a self-aligning door allows for smooth operation. Left or right hand open.

Width: 30.75" - 57"
Height: 78" - 101.5"

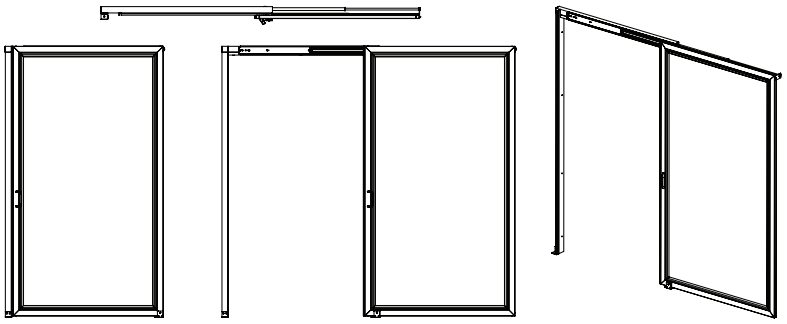

SLIDING DOUBLE DOOR

Easy-glide track system with a self-aligning doors allows for smooth operation.

Width: 52" - 68"
Height: 78" - 101.5"

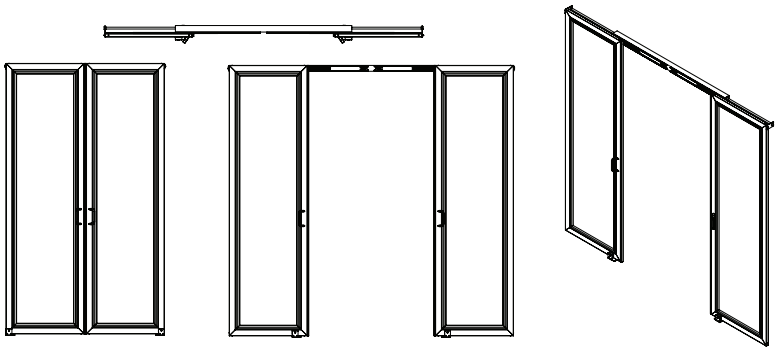

USG DATACONSTRUX™ CONTAINMENT
POWERED BY SUBZERO ENGINEERING®

ORDER SAMPLES/LITERATURE
usg.com or samplit@usg.com

TECHNICAL SERVICES
800 USG.4YOU (874-4968)

FOR MOST UP-TO-DATE TECHNICAL INFORMATION AND LEED REPORT TOOL
usgdesignstudio.com
usg.ecomedes.com

Systems

FRAME

Clear or Black Finish

Property	Material	Result
Tensile Strength	Aluminum	22,000 psi

DOOR INSERT PANELS

3mm — Solid Polycarbonate Flammability

Property	Test	Result
Smoke Dev.	ASTM E84	Class A
Flame Spread	ASTM E84	Class A

4mm — Twin Wall Polycarbonate Flammability

Smoke Dev.	ASTM E84	40
Flame Spread	ASTM E84	5

WALL PANELS

6mm — Twin Wall Polycarbonate Flammability

Property	Material	Result
Smoke Dev.	ASTM E84	40
Flame Spread	ASTM E84	5

Floor and Over Rack Panels

Width: 11" - 50"
Height: 11" - 98"

Floor Panel

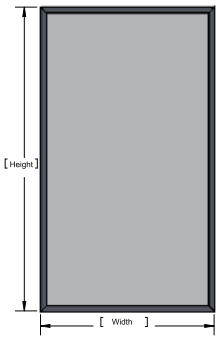

Over Rack Panel

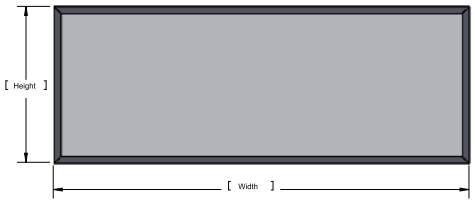

Thermoplastic Panels

Property	Test	Result
Water Absorption, 24 Hours	ASTM D570	0.15%
Tensile Strength @ Yield	ASTM D638	8,700 psi
Tensile Modulus	ASTM D638	333,000 psi
Elongation @ Break	ASTM D638	>100%
Elongation @ Yield	ASTM D638	6%
Flexural Strength	ASTM D790	338,000 psi
Flexural Modulus of Elasticity	ASTM D256	No Break
Izod Impact Strength – Milled Notched	ASTM D256	15 ft-lb/in
Deflection Temperature @ 264 psi	ASTM D648	290 °F
Vicat Softening Temp @ 122 °F/h50N	ASTM D1525	266 °F
Thermal Conductivity	DIN 2612	65 W/m x °C
Coefficient of Linear Expansion 122 °F	ASTM D696	3.6 10-5/ °F
Volume Resistivity	ASTM D257	3 x 1014 Ohms - cm
Dissipation Factor 60Hz	ASTM D150	0.004

PHYSICAL DATA

Door and Panel Frames
Material:
Aluminum

Door Insert Panels
Material:
Polycarbonate

Wall Panels
Material:
Polycarbonate
Thermoplastic

Notice
The information in this document is subject to change without notice. USG Corp. assumes no responsibility for any errors that may inadvertently appear in this document.

CG438845/5-26
© 2026 USG Corporation and/or its affiliates. All rights reserved.
Printed in USA

Manufactured by
Subzero Engineering
805 South 3600 West
Salt Lake City, UT 84104

The trademarks USG, ALTA, CIMA, DATACONSTRUX, the design elements and colors, and related marks are trademarks of USG Corporation or its affiliates.

SUBZERO ENGINEERING is a trademark of SubZero Holdco LLC.

Safety First! Follow good safety/industrial hygiene practices during installation. Wear appropriate personal protective equipment. Read SDS and literature before specification and installation.